Metal Cabinet Loudspeaker

LB1-UM20E-x, LB1-UM50E-x

BOSCH

en Installation note

1 Installation

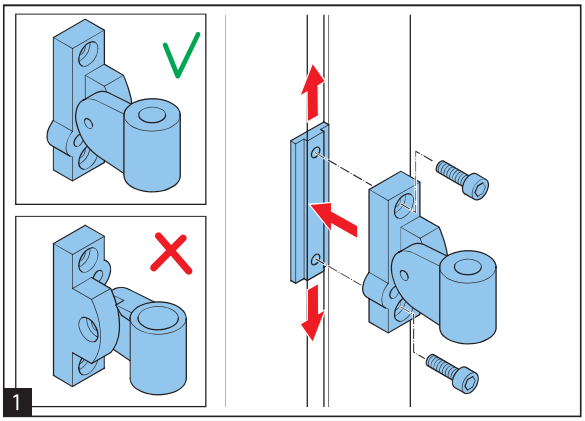

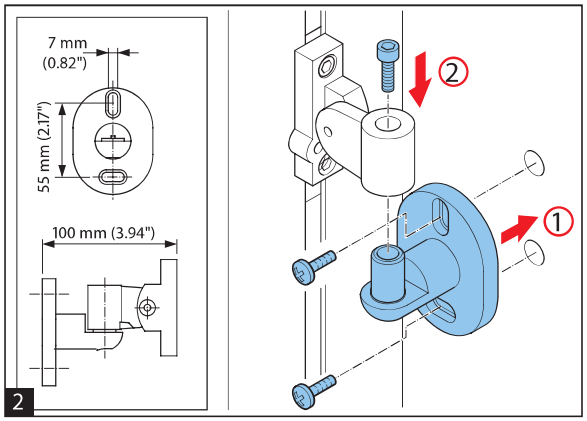

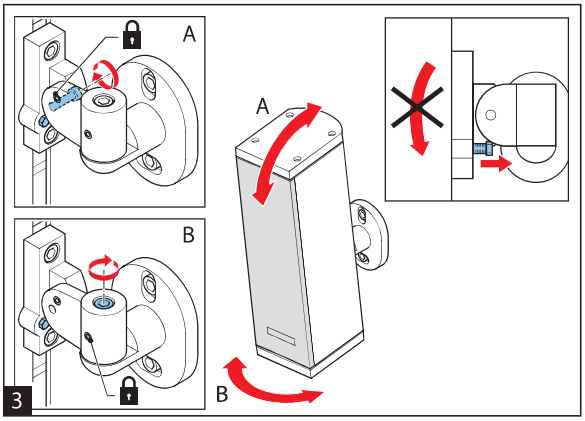

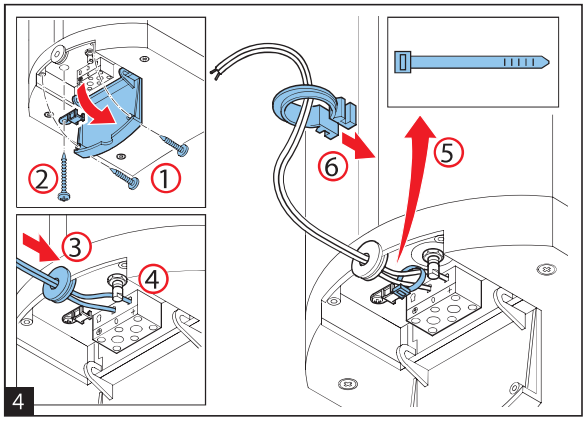

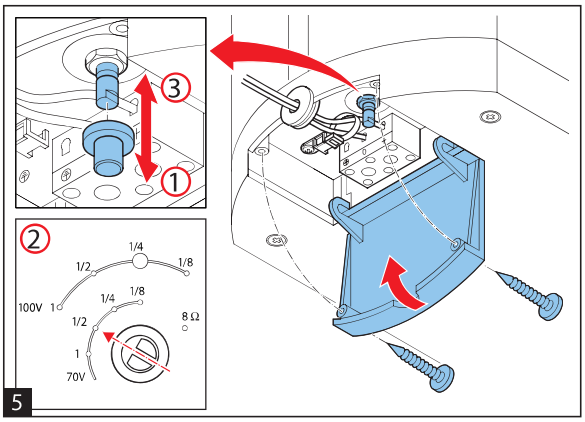

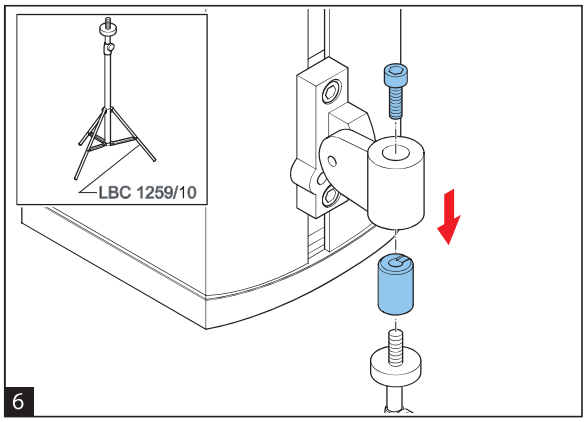

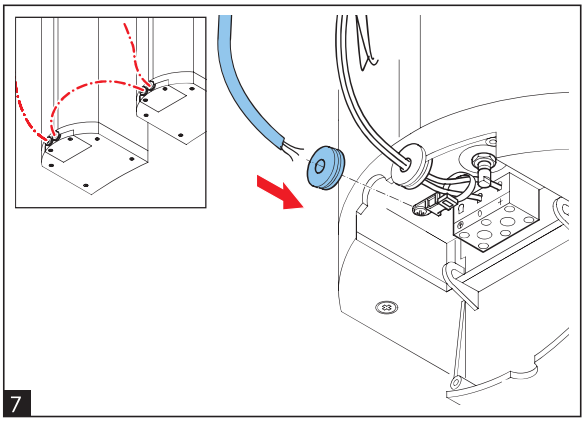

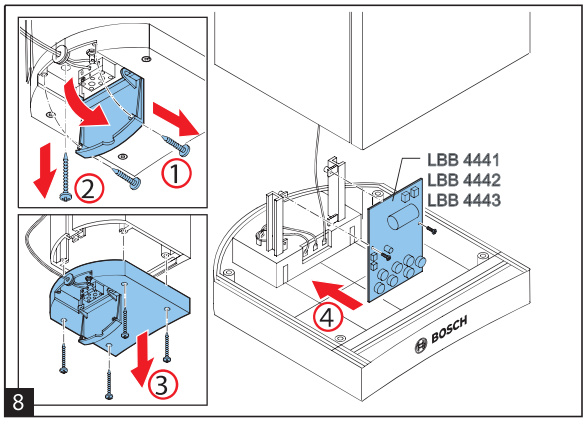

2 Technical data

Electrical*

Product	**LB1-UM20E-(D/L)**	**LB1-UM50E-(D/L)**
Description	Premium-sound Cabinet Loudspeaker	Premium-sound Cabinet Loudspeaker
Maximum power	30 W	75 W
Rated power (PHC)	20 W	50 W
Power tapping	20 / 10 / 5 / 2.5 W	50 / 25 / 12.5 / 6.25 W
Sound pressure level at rated power / 1 W (1 kHz, 1 m)	101 dB / 88 dB (SPL)	108 dB / 91 dB (SPL)
Sound pressure level at rated power / 1 W (1 kHz, 4 m)	87 dB / 74 dB (SPL)	94 dB / 79 dB (SPL)
Effective frequency range (-10 dB)	90 Hz to 20 kHz	90 Hz to 20 kHz
Opening angle at 1 kHz / 4 kHz (-6 dB)		
horizontal	174° / 136°	186° / 126°
vertical	127° / 141°	84° / 62°

Product	**LB1-UM20E-(D/L)**			
Rated input voltage Rated impedance		12.65 V	70 V	100 V
	20 W	8 Ohm	250 Ohm	500 Ohm
	10 W	N.A.	500 Ohm	1000 Ohm
	5 W	N.A.	1000 Ohm	2000 Ohm
	2.5 W	N.A.	2000 Ohm	4000 Ohm
Product	**LB1-UM50E-(D/L)**			
Rated input voltage Rated impedance		20 V	70 V	100 V
	50 W	8 Ohm	100 Ohm	200 Ohm
	25 W	N.A.	200 Ohm	400 Ohm
	12.5 W	N.A.	400 Ohm	800 Ohm
	6.25 W	N.A.	800 Ohm	1600 Ohm

Connector		3-pole screw block

* Technical performance data acc. to IEC 60268-5

Mechanical

Product	LB1-UM20-(D/L)	LB1-UM50-(D/L)
Dimensions (W x D)	274x160x180mm 10.78x6.29x7.08in	405x160x180mm 15.94x6.29x7.08in
Loudspeaker diameter		
Woofer	134.5 mm (5 in)	134.5 mm (5 in)
Dome tweeter	25.4 mm (1 in)	25.4 mm (1 in)
Material		
Cabinet	Aluminum	Aluminum
Front grille	Aluminum	Aluminum
Top and bottom	ABS	ABS
Color	White (RAL 9010) (L) or Charcoal (RAL 7021) (D)	White (RAL 9010) (L) or Charcoal (RAL 7021) (D)
Weight	3.88 kg (8.55 lb)	5.58 kg (12.30 lb)

Environmental

Operating temperature	-25 ºC to +55 ºC (-13 ºF to +131 ºF)
Storage and transport temperature	-40 ºC to +70 ºC (-40 ºF to +158 ºF)
Relative humidity	<95%

Note:

- The specification data is measured in an anechoic chamber, free field
- The reference axis is perpendicular to the center point of the front grille
- The reference plane is perpendicular to the center of the reference axis
- The horizontal plane is perpendicular to the center of the reference plane

2.1 Certification and approvals

Safety	acc. to EN 60065
Water protection	acc. to EN 60529, IP65
Self-extinguishing ABS	acc. to UL 94 V 0

2.2 Additional technical data

LB1-UM20E-x

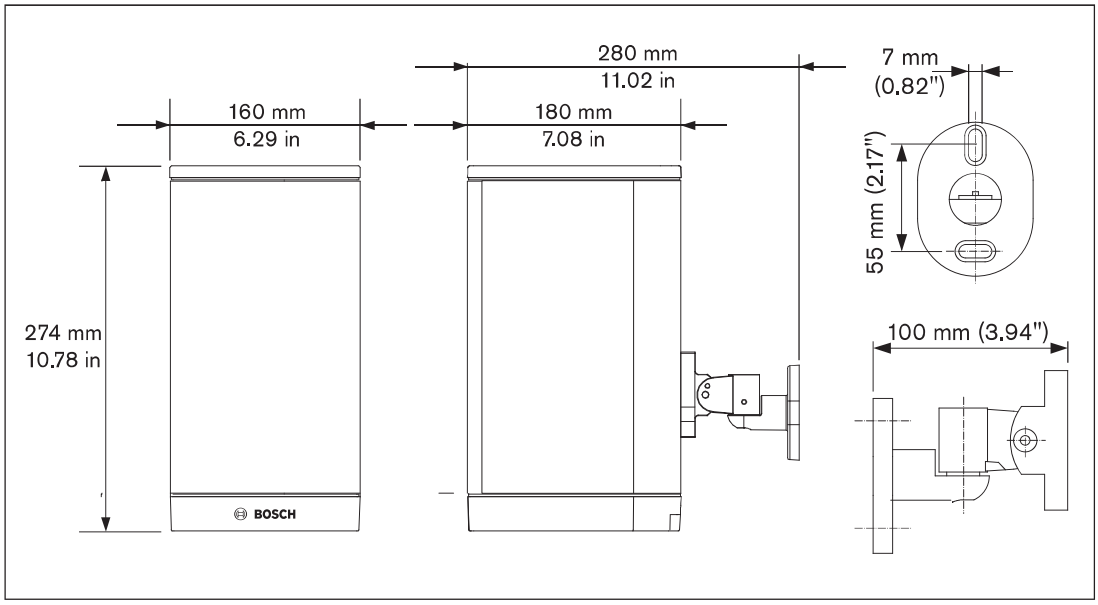

Dimensions

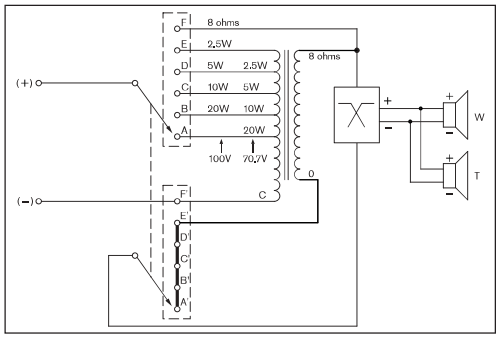

Circuit diagram

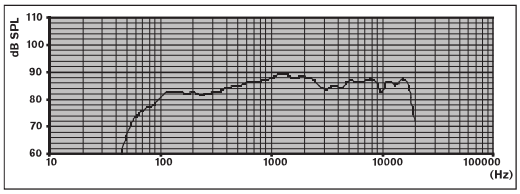

Frequency response

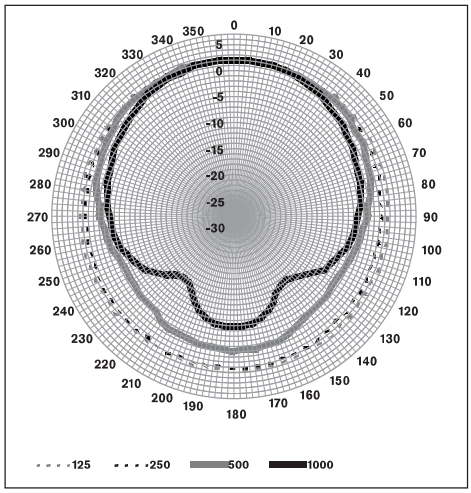

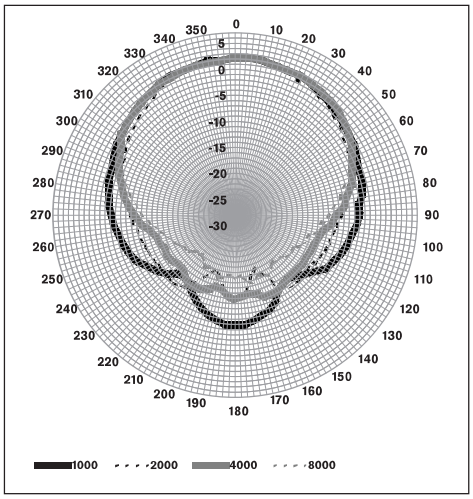

Horizontal polar diagram (measured with pink noise)

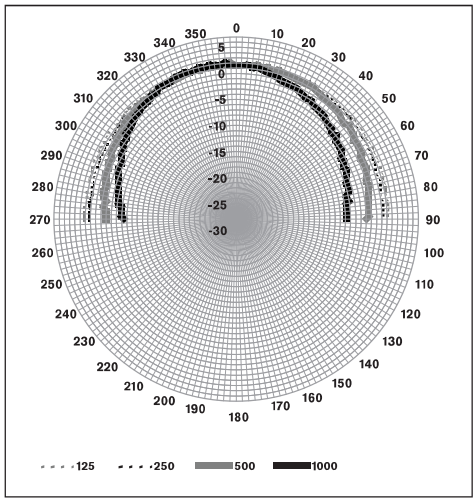

Horizontal polar diagram (measured with pink noise)

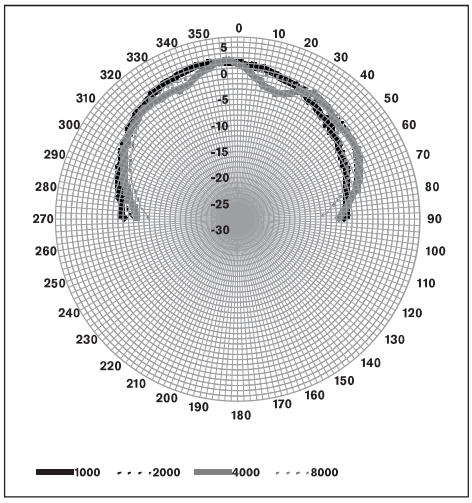

Vertical polar diagram (measured with pink noise)

Vertical polar diagram (measured with pink noise)

LB1-UM50E-x

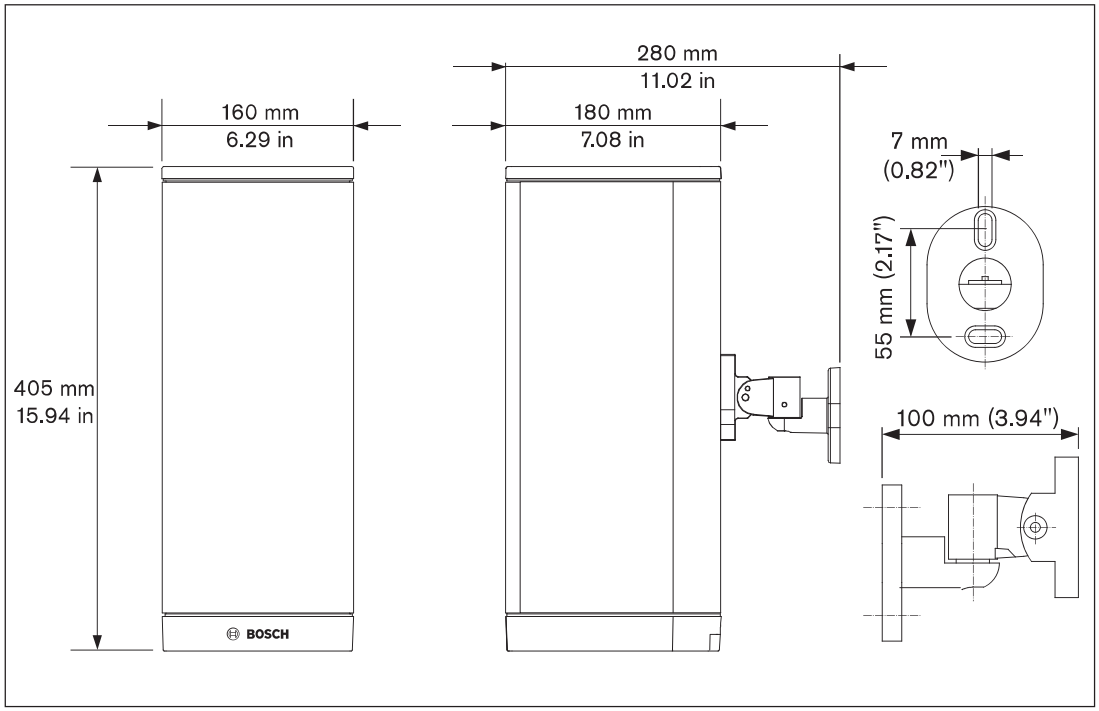

Dimensions